Available online at www.sciencedirect.com

ScienceDirect

Current Opinion in Virology

Viruses in bats and potential spillover to animals and humans

Lin-Fa Wang and Danielle E Anderson

In the last two decades, several high impact zoonotic disease outbreaks have been linked to bat-borne viruses. These include SARS coronavirus, Hendra virus and Nipah virus. In addition, it has been suspected that ebolaviruses and MERS coronavirus are also linked to bats. It is being increasingly accepted that bats are potential reservoirs of a large number of known and unknown viruses, many of which could spillover into animal and human populations. However, our knowledge into basic bat biology and immunology is very limited and we have little understanding of major factors contributing to the risk of bat virus spillover events. Here we provide a brief review of the latest findings in bat viruses and their potential risk of cross-species transmission.

Address
Programme in Emerging Infectious Diseases, Duke-NUS Medical School, 169857, Singapore

Corresponding author: Wang, Lin-Fa (linfa.wang@duke-nus.edu.sg)

Current Opinion in Virology 2019, **34**:79–89

This review comes from a themed issue on **Emerging viruses: inter-species transmission**

Edited by **Adolfo García-Sastre** and **Juergen A Richt**

For a complete overview see the Issue and the Editorial

Available online 18th January 2019

https://doi.org/10.1016/j.coviro.2018.12.007

1879-6257/© 2019 Published by Elsevier B.V.

Introduction

Although there have been significant advances in diagnostics and medical countermeasures during the past century, the risk of cross-species transmission of known and unknown pathogens has emerged as a threat to human and animal populations due to a various factors, including industrialization, intensive farming, urbanization, rapid transportation and climate change [1,2•]. It is generally accepted that approximately 75% of emerging infectious diseases for humans are zoonoses [1,3,4]. The rate of emergence of novel viruses appears to be increasing as a result of both increased spillover from their natural reservoirs and our improved ability in detection [3].

Among the newly emerged and most deadly zoonotic viruses discovered in the past few decades, bat-borne viruses occupy a greater proportion than viruses from any other mammalian order [5••,6••,7,8]. Several studies have now concluded that bats are exceptional in their ability to act as natural reservoir of viruses and they are able to harbour more diverse viruses per animal species [6••,9]. While the underlying biology for this observation is yet to be uncovered, it is certain that we will witness more disease outbreaks from bat-borne viruses in the years to come.

At the present time, it is impossible to predict the risk of spillover potential for the vast number of viruses or viral sequences which have been detected in bats around the world. But it will be a good start to focus on the viruses in the 'known unknown' category, that is new or variant strains of bat viruses related to those which have already spilled over into and caused diseases in animals or humans. Although bats are known to also carry DNA viruses, all of the disease-causing and species-jumping bat-viruses are so far limited to RNA viruses.

In this brief review, we will focus on the major RNA virus families harboured by bats that have demonstrated spillover and severe disease-causing potential.

Bats as a rich source of emerging viruses

Bats, order Chiroptera, are the only mammals capable of powered flight and are among the most ancient of mammals and underwent extensive speciation for the last 100 million years. There are currently more than 1000 species of bats, making them the second most diverse mammalian group, after rodents, and representing 20% of extant mammalian species [10]. Although the recent surge of interest in bats is mainly driven by their association with many of the most lethal viruses, bats are known for their exceptionally long life span and for being less prone to cancer [8].

Bats are not only rich in species diversity, but also have great variation in their geographical locations, dietary preferences, physiological range of body temperatures, social behaviour and navigation and vision systems [11]. It is therefore important to recognise that such immense diversity makes it difficult to generalize-specific associations relating to bats and viruses to all members of the chiropteran order. In addition, due to the large number of bats around the world and the fact that similar bats can live in different geographical locations and multiple bat species can co-exist in similar ecological habitats, any virus surveillance or virome detection study should not be viewed as a holistic examination of any given systems.

Instead, they are more likely to be a transient snapshot of a specialised system at a given time.

While recognising that there are limitations on current investigations of viruses in bats, we are also optimistic that with the increasing interest and research activities in this field, we will gain a more accurate panoramic view of bats and viruses in the not too distant future. As a matter of fact, the findings accumulated in the last few decades have already pointed towards a few virus families as being both more prevalent in bats and with proven potential for spillover into other animal species [5••,12]. The summary below highlights these virus families, followed by other bat viruses which may possess spillover potential and are considered to be important enough to keep on our watch list.

Coronaviruses

Coronaviruses were not known to cause severe diseases in humans before the emergence of severe acute respiratory syndrome (SARS) coronavirus (CoV). The SARS outbreak in 2002–2003 remains as one the most impactful pandemic outbreaks of the 21st century mainly due to the fact that the aetiology was totally unknown during the outbreak, which made accurate diagnosis and effective control impossible [13,14]. The outbreak lasted more than six months with rapid spread of the virus from southern China to more than 30 countries on all major continents, and resulted in more than 8000 human infections and 774 deaths [14]. Multiple international teams spent the next decade hunting for the origin of SARS-CoV and serendipitously found many SARS-CoV related viruses in bats, most abundantly from the genus *Rhinolophus* (horseshoe bats) [15–17]. The most conclusive evidence came from the isolation of a CoV from bats in China which was more than 98% identical in genome sequence to SARS-CoV and capable of using the SARS-CoV receptor, ACE2, on human cells [18•]. While it is not easy to assess the spillover potential of many SARS-CoV related bat CoVs due to unsuccessful attempts to isolate the viruses, it should be noted that a 'consensus' virus constructed via reverse genetics pointed to a high probability of human infection [19].

Although a significant amount of attention was focused on SARS-CoV related viruses, the international community was again caught by surprise with the emergence of the Middle East respiratory syndrome (MERS)-CoV in 2012 [20•]. MERS-CoV is genetically quite different from SARS-CoV (Figure 1), despite both viruses belonging to the genus *Betacoronavrius*. As of October 1, 2018, MERS-CoV has infected 2249 people in 27 countries with 35% case fatality [21]. Camels have been identified as important reservoir hosts for MERS-CoV and MERS-CoV related viruses [22,23,24•,25,26,27•], but there is strong evidence that the evolutionary ancestors of these viruses are bats [28,29,30•]. Co-circulation and recombination of CoVs has been implicated as a mechanism that maintains viral diversity and continuous zoonotic transmission [27•,31].

Severe disease outbreaks caused by CoVs related to viruses associated with bats are not limited to humans. In 2016–2017, there was a major outbreak of swine acute diarrhoea syndrome (SADS) in piglets in multiple southern China farms in a region geographically close to where the SARS outbreak began in 2002 [32••]. The origin of the causative agent, SADS-CoV, was quickly traced back to a bat colony in the vicinity of the pig farms where bat CoV with more than 98% genome sequence identity was detected in *Rhinolophus* spp. bats. SADS-CoV belongs to the genus *Alphacoronavirus* and is genetically most closely related to HKU2, a previously reported bat CoV [32••]. Human coronavirus 229E is in the same genus, but is only distantly related to those bat CoVs. Examination of pig farmers with close contact with sick and dying piglets did not yield evidence of human infection, hence humans may not be susceptible to SADS-CoV. Further study is required to determine the true zoonotic potential of SADS-CoV and closely related bat CoVs.

For unknown reasons, despite of the wide presence of CoVs in bats of different locations and species with relative high viral genome levels, multiple attempts by different international groups to isolate bat CoVs have been largely unsuccessful. The only successful isolation was achieved with SARS-like viruses by direct isolation using Vero E6 cells [18•] or inoculation into the brain of suckling rats [17].

Paramyxoviruses

One of the first bat-borne BSL4 agents identified was Hendra virus (HeV) in Australia in 1994 [33•], an emerging pathogen that caused the deaths of 7 people. Additionally, 103 equine and 2 canine cases have been reported [34,35]. In humans the case fatality rate from HeV infection is 57%. All four species of flying fox in Australia (*Pteropus poliocephalus*, *P. alecto*, *P. scapulatus* and *P. conspicillatus*) have been found to be seropositive for HeV antibodies and all have detectable virus in their urine with black flying fox (*Pteropus alecto*) being the major reservoir host [36]. A closely related virus, Nipah virus (NiV) emerged in 1998 in Malaysia, which transmitted from bats to humans via pigs as an intermediate and amplifying host [37]. In total, that outbreak resulted in 283 human cases and 109 deaths (39% case fatality) in Malaysia as well as 11 cases and one death in Singaporean abattoir workers [38]. A related, but not identical virus, was responsible for multiple NiV outbreaks in Bangladesh/India [39,40], with the latest outbreak that occurred in 2018 in Kerala and resulted in 19 human infections and 17 deaths [41]. The reservoir hosts of NiV have been identified as the large flying fox (*P. vampyrus*) and small flying fox (*P. hypomenalus*) in Malaysia [42,43]

Figure 1

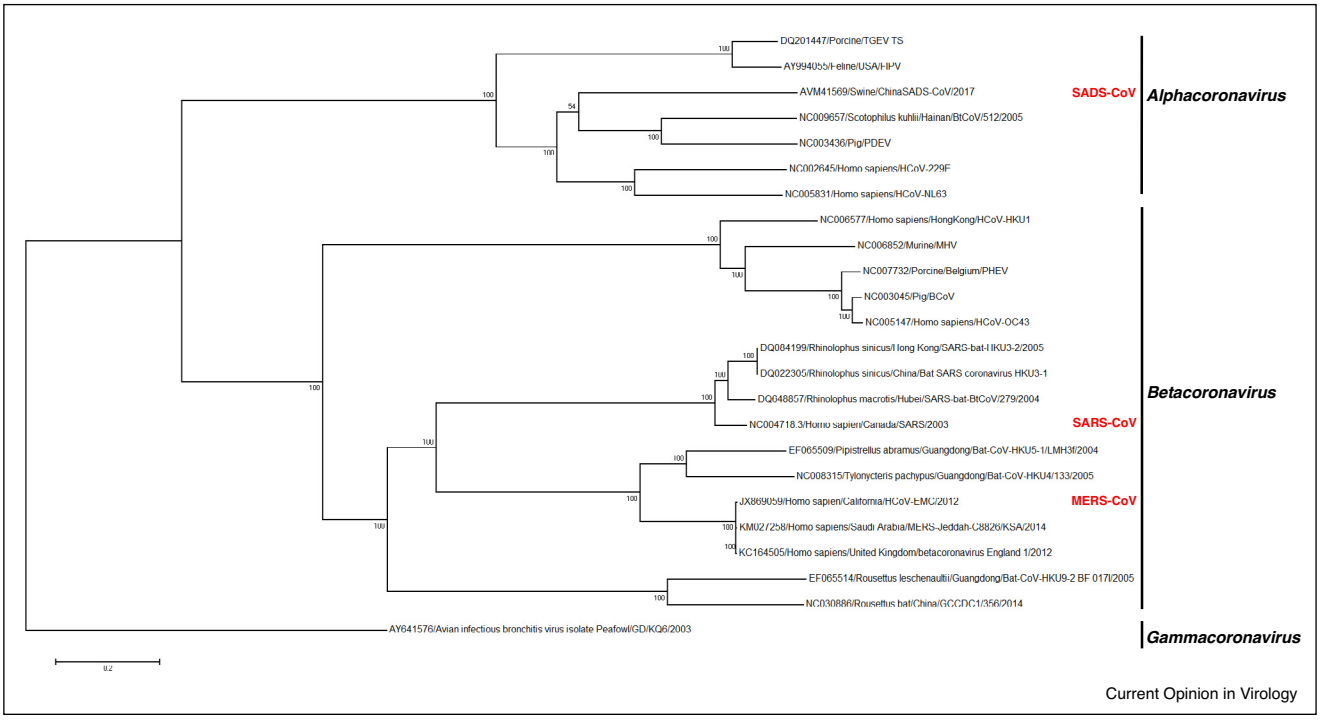

Phylogeny of coronaviruses. The phylogenetic analysis is done using Maximum Likelihood method with the General Time Reversible model in MEGA7. The percentage of trees in which the associated taxa clustered together is shown next to the branches. The tree is drawn to scale, with branch lengths measured in the number of substitutions per site. The analysis was conducted with 24 representative genome sequences with corresponding GenBank numbers provided in the tree. The three CoVs with proven lethal disease outbreaks are highlighted in red. Genus names are provided on the right with bars indicating the taxonomy boundaries.

and the Indian flying fox (*P. giganteus*) in Bangladesh and India [44,45]. After many years of unsuccessful attempts, NiV was isolated from the Indian flying fox in Bangladesh [46]. The current status of henipavirus transmission during outbreaks is summarised in Figure 2. Apart from HeV and NiV, Cedar virus (CedPV) remains the only other isolated henipavirus species and experimental evidence from animal trials suggests that CedPV is non-pathogenic for humans [47]. Serological evidence of henipavirus infection has been detected in Lyle's flying fox (*Pteropus lylei*) populations in Southeast Asia [48], large flying fox in Indonesia [49] and may be endemic among bat populations on the African continent [50–53]. Additionally, a Ghanaian bat henipavirus, Kumasi Virus (KumPV), genome has been sequenced [54••]. Cumulatively, these studies indicate a wide global distribution of henipaviruses.

Menangle virus (MenPV) is a zoonotic paramyxovirus, first identified in a disease outbreak of reproductive disease in pigs in 1997 at a piggery in New South Wales, Australia [55,56]. The virus was also shown to be zoonotic, with 2 piggery workers with high-level exposure developing a serious influenza-like illness and rash during the outbreak. These individuals also developed neutralizing antibodies to MenPV [55]. Bats were hypothesized to be the source of the outbreak and MenPV-neutralizing antibodies were detected in grey-headed flying foxes (*Pteropus poliocephalus*), black flying foxes (*Pteropus alecto*) and spectacled flying foxes (*Pteropus conspicillatus*) [56]. In 2009, MenPV was isolated from a bat roost at Cedar Grove, Australia, where black flying foxes were the predominant species in this colony at the time of sampling [57]. Tioman virus (TioPV) was isolated from urine of the small flying fox (*Pteropus hypomelanus*) collected from Tioman Island, Malaysia [58]. Due the close relationship of TioPV with the zoonotic MenPV, an experimental challenge of pigs was performed [59] and the trial suggested that pigs could act as an intermediate or amplifying host for TioPV and that oral secretion is a possible means of viral transmission.

The identification of sequences similar to mumps virus (MuV) in bats revealed that a virus that was believed to only infect humans has substantial similarity to a counterpart in bats [54••]. The genetic and functional

Figure 2

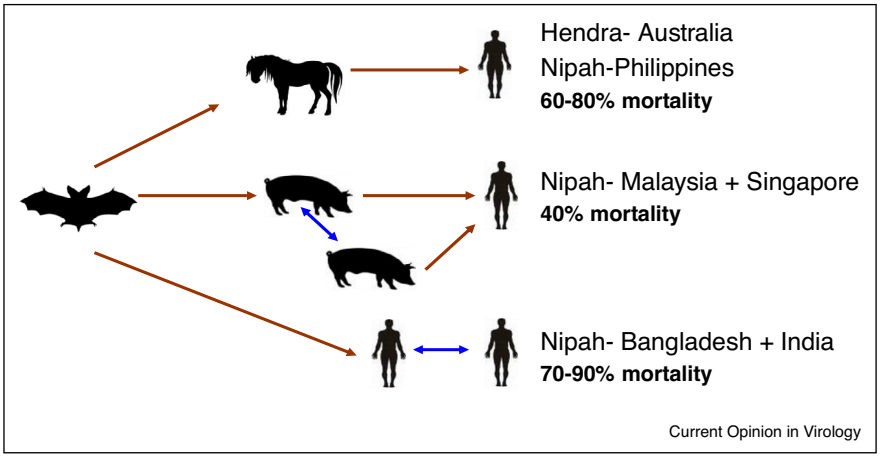

Different routes of transmission of known henipaviruses in various outbreaks. During henipavirus outbreaks, transmission of the virus may be via an amplifying host (such as horse for HeV and pigs for NiV), or the virus may be transmitted directly from bats to humans via contamination in food, drink or environment.

relationship between human MuV and bat MuV [60•,61–63] supports the possibility of bats as a reservoir for interspecies transmission.

Aside from MenPV and TioPV, other paramyxoviruses from the genus *Rubulavirus* have been isolated from or detected in bats without evidence of zoonotic transmission. Porcine rubulavirus (PorPV), the causative agent 'blue eye' disease in pigs was first identified in Mexico in 1980 [64] and serological surveillance data [65] suggests bats are likely reservoir of this virus. Mapuera virus (MprPV), a rubulavirus closely related to PorPV [66] that has not been associated with any human disease, was isolated from the salivary glands of a healthy fruit bat (*Sturnira lilium*) captured in Brazil in 1979 [67].

Tukoko virus (ThkPV) 1, 2 and 3 are rubulaviruses that have been detected and sequenced from *Rousettus leschenaultii* in China [68], but these viruses were unable to be cultured in the laboratory and the potential of these viruses to cause disease in humans and animals is yet to be ascertained. In 2012, metagenomic analysis from RNA extracted from blood and serum samples of a patient with severe acute febrile illness revealed a novel paramyxovirus [69•] most closely related to ThkPV-3. The novel paramyxovirus was provisionally named Sosuga virus (SosPV) in recognition of its probable geographic origin (South Sudan, Uganda). The patient, a wildlife biologist, developed a severe illness after spending six weeks sampling bats and rodents. Symptoms included fever, malaise, headache, generalized myalgia and arthralgia, neck stiffness, a metallic taste, sore throat and a maculopapular rash that was present later in the infection. The biologist was discharged after two weeks of hospitalization, but considerable sequelae (myalgia, arthralgia, headache, malaise, and fatigue) persisted for several months [69•]. Bat tissues collected during the period just before the onset of symptoms were tested for SosPV, and several Egyptian rousette bats (*Rousettus aegyptiacus*) were found to be positive. Four additional SosPV-positive samples were found in archived tissues from Egyptian rousette bats collected at other locations in Uganda, suggesting this species could be a potential natural reservoir for this paramyxovirus [70].

Filoviruses

Although it has been known for more than four decades that Ebola and Marburg viruses can cause lethal haemorrhagic diseases in humans, the massive outbreak in west Africa during 2014–16 was unprecedented with more than 11 000 human fatalities [71]. The ongoing Ebola outbreak in the Democratic Republic of Congo is a further indication that more outbreaks in Africa [72].

Currently, there are five distinctive species identified in the genus *Ebolavirus*, including Bundibugyo (BDBV), Reston (RESTV), Sudan (SUDV), Taï Forest (TAFV) and Zaire (EBOV). Very recently, a sixth species has been proposed, named Bombali virus (BOMV), based on genome sequence detected in free-tailed bats in Sierra Leone (*Chaerephon pumilus* and *Mops condylurus*) [73]. Both members of the genus *Marburgvirus*, Marburg virus (MARV) and Ravn virus (RAVV), have been shown to cause fatal diseases in humans [74,75]. The third genus, *Cuevavirus*, contains only one species, Lloviu virus (LLOV), whose disease-causing potential in humans is unknown [76,77]. Our group has recently characterized complete coding genome of a new filovirus named

Figure 3

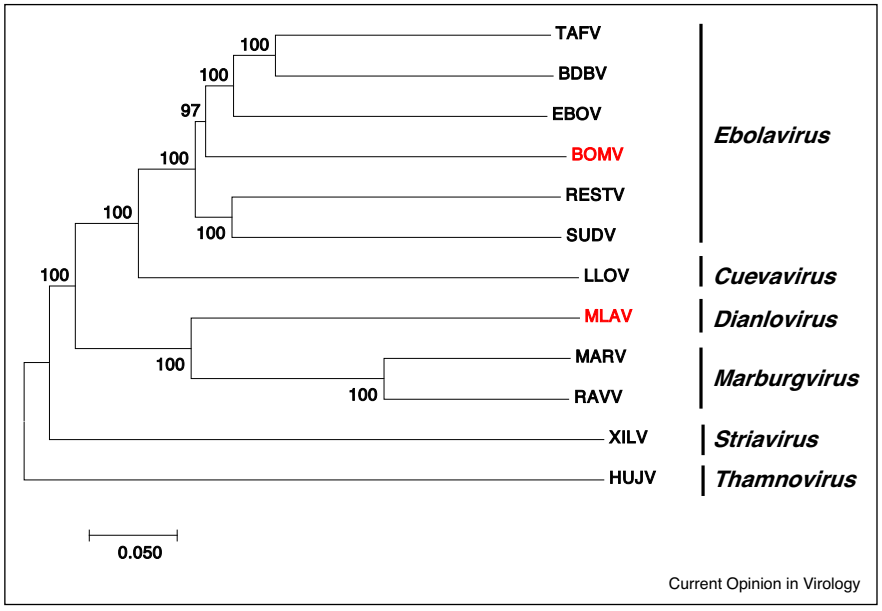

Genetic relationship of all known filoviruses. The phylogenetic tree was built using MEGA7 using the Neighbor-Joining method with p-distance model under pairwise deletion. The bootstrap value is 1000. Virus abbreviation, full name and accession number are as follows: TAFV, Taï forest virus, NC_014372; BDBV, Bundibugyo virus, NC_014373; EBOV, Ebola virus, NC_002549; SUDV, Sudan virus, NC_006432; RESTV, Reston virus, NC_004161; BOMV, Bombali virus, MF319186; LLOV, Lloviu virus, NC_016144; MARV, Marburg virus, NC_001608; RAVV, Ravn virus, NC_024781; MLAV, Měnglà virus, KX371887; XILV, Xīlǎng virus, MG599980; HUJV, Huángjiāo virus, MG599981. The two newest members (BOMV and MLAV) are highlighted in red. Genus names are provided on the right with bars indicating the taxonomy boundaries.

Mengla virus (MLAV) from *Rousettus* bats in China, which is genetically distinctive from all known filoviruses and most likely represents the prototype of a new filovirus genus (Figure 3), putatively named *Dianlovirus* [78•].

While LLOV, BOMV and MLAV sequences were first discovered in bats, and Marburg viruses have been isolated directly from bats [79•,80], the role of bats as a reservoir for ebolaviruses is still debated mainly due to the lack of direct isolation of ebolaviruses from bats [81]. However, the detection of BOMV seems to strengthen the notion that bats are likely natural reservoirs of ebolaviruses [73].

Reoviruses

Reoviruses (respiratory enteric orphan) were not known to be associated with severe human diseases when they were first discovered in the 1950s and about one third of the human population has been exposed to at least one of the mammalian reoviruses (MRVs) [82]. The outbreak of a severe respiratory and enteric disease among different members of a family in Melaka, Malaysia, changed our appreciation of both the diversity and the zoonotic potential of this class of viruses in the genus *Orthoreovirus*, family *Reoviridae* [83••]. Since the discovery of Melaka virus during the 2006 outbreak investigation, at least 15 different strains have been identified, either from human outbreak investigations or bat virome studies [83••,84–95], as summarised in Table 1. Serological and molecular detection studies suggest that the prevalence of these viruses could be severely underestimated due to the lack of routine diagnosis in hospitals [96,97].

Other viruses

A plethora of known and novel viruses were identified in samples collected and metagenomically screened from straw-coloured fruit bat (*Eidolon helvum*) in Cameroon [98] and *Neoromicia* species in South Africa [99]. These bats were shown to harbor divergent viruses, including members of the families *Astroviridae*, *Circoviruidae*, *Parvoviridae*, *Partitviridae*, *Coronaviridae*, *Picobirnavirdae*, *Adenoviridae*, *Herpesviridae*, *Papillomaviridae*, *Phenuiviridae*, and *Picornaviridae* [98,99]. These recent studies build upon previous work [100–103] to further expand the diversity of the bat virome. Uniquely, the picobirnaviruses identified utilize an alternative genetic code [98].

Similarly, there are many other bat-borne viruses with the potential for zoonotic transmission, but without documented human infection. Rotaviruses and noroviruses, members of the families *Reoviridae* and *Caliciviridae*, respectively, are the major etiologic agents of acute gastroenteritis and several reports have identified rotavirus [98,99,104–106] or norovirus [107,108] sequences in

Table 1

Summary of known pteropine orthoreoviruses (PRVs)

PRV Isolate[a]	Alternative name	Year of isolation	Host	Country of Origin	Reference
PRV1NB	Nelson Bay Virus	1968	Bat (*Pteropus policephalus*)	Australia	[84]
PRV2P	Pulau Virus	1999	Bat (*Pteropus hypomelanus*)	Malaysia	[85]
PRV3M	Melaka Virus	2006	Human	Malaysia	[83••]
PRV4K	Kampar Virus	2006	Human	Malaysia	[86]
PRV5HK	HK23629/07	2007	Human	Indonesia	[87]
PRV6XR	Xi River virus	2006	Bat (*Rosettus leschenaultii*)	China	[88]
PRV7S	Sikamat Virus	2010	Human	Malaysia	[89]
PRV8B	HK46886/09	2009	Human	Indonesia	[90]
PRV9HK	HK50842/10	2010	Human	Indonesia	[90]
PRV10M	Miyazaki-Bali 2007	2007	Human	Indonesia	[91]
PRV11C	Cangyuan virus	2012	Bat (*Rosettus leschenaultii*)	China	[92]
PRV12I	Indonesia/2010	2010	Bat (*Pteropus vampyrus*)	Indonesia	[93]
PRV13P	Samal-24	2013	Bat (*Eonycteris spelaea*)	Philippines	[94]
PRV14P	Talikud-80	2013	Bat (*Rosettus amplexicaudatus*)	Philippines	[94]
PRV15G	Garut-69	2017	Bat (*Pteropus vampyrus*)	Indonesia	[95]

[a] PRV numbering nomenclature is based on the temporal sequence of isolation or detection and/or publication.

different bat species worldwide. The caliciviruses recently discovered in bats were found to be antigenically similar to human noroviruses, again highlighting the potential for cross-species transmission [109].

Influenza virus is known for zoonotic transmission and two novel subtypes were discovered in bats. In 2012, a new influenza virus genomic sequence was identified in frugivorous yellow-shouldered bats (*Sturnira lilium*) in Guatemala and was designated H17N10 [110]. The following year, a distinct influenza genome, classified as H18N11, was characterized from the flat-faced fruit bat (*Artibeus planirostris*) in Peru [111]. Although virus isolation was not successful, reverse genetics was used to synthetically generate these viruses [112] and subsequent research highlighted the differences between these viruses and conventional influenza viruses. Identification of these viruses in bats not only expanded the host reservoir of influenza and the genetic diversity of the viruses, but immediately raised the question about zoonotic potential. Studies using synthetic viruses have allowed the identification and characterization of cellular receptors mediating virus attachment and entry, factors important for understanding the tissue tropism and possible zoonotic transmission [112–114].

Hantaviruses are predominantly rodent-borne pathogens and transmission to humans can lead to severe diseases and death. Species of hantaviruses have been identified in bats from Africa and Asia, expanding the potential reservoirs range and genetic diversity of these viruses [115–120]. Hantaan orthohantavirus (HTNV) was isolated from two broadly distributed insectivorous bat species (*Eptesicus serotinus* and *Rhinolophus ferrumequinum*) [117]. Evidence of a lethal genotype of Andes orthohantavirus (ANDV), Araraquara orthohantavirus (ARQV), has been documented among several Neotropical bats in Brazil [118,120]. ARQV is one of the most virulent and lethal among all hantaviruses in humans and viral RNA closely related to ARQV was detected in urine of the common vampire bat (*Desmodus rotundus*) [119]. These studies highlight that bats are probably playing an under appreciated part on the maintenance, circulation, and transmission of hantavirus in nature.

Recently, a group of previous unknown bunyaviruses, including severe fever with thrombocytopenia syndrome (SFTS) virus and Heartland virus (HRTV), emerged during human disease outbreaks [121,122]. Although their animal origins are not known, the most closely related virus has been found in bats in India. In 2010 a novel phlebovirus was isolated from Leschenault's rousette bat (*Rousettus leschenaultii*) in western India. The virus was identified by electron microscopy and phylogenetic analysis of the complete genome showed its close relation to SFTSV and HRTV [123].

In contrast to new and emerging viruses where viral pathogenesis and transmission route is unknown, rabies has long been recognized throughout history, due to the characteristic symptoms associated with the disease [124,125]. Infection with lyssaviruses, including rabies virus and Australian bat lyssavirus leads to rabies disease [126]. Although bites and scratches from infected bats occur, there is an effective vaccine and post exposure prophylaxis available for this deadly disease.

Risk assessment of the 'known unknowns'

We know that there are several groups of bat viruses that can infect and cause severe diseases in humans, as we have briefly covered in this review. It is also well established that there are a large number of related viruses circulating in bats in different parts of the globe, but as of yet we are unable to accurately predict which of these

viruses are capable of spillover and whether they will cause diseases in humans. We view these viruses as the 'known unknowns'. Among the four families of viruses discussed in this review, each has a different combination of characteristics.

In terms of frequency, the reoviruses seem to be the most permissive to spillover, especially in Asia. However, to date we have only experienced severe, but not lethal, infections in humans. On the other hand, filoviruses and henipaviruses are far the more deadly but the frequency of spillover is relatively low [7,12]. Rabies virus is highly lethal and responsible for a large number of human deaths. But the direct spillover from bats to humans is limited. In contrast, the known genetic diversity of CoVs in bats is much greater than any of the other bat zoonotic viruses. CoVs contain the largest genomes of all known RNA viruses, and hence are naturally exposed to a higher chance of genetic mutation per genome. To prevent frequent 'lethal mutations', CoVs have evolved to contain an exoribonuclease which increases the fidelity of RNA genome replication [127,128]. However, the large positive RNA genomes of CoVs are highly prone to gross genetic changes via recombination, which is elegantly illustrated by two recent studies, one on SARS-like viruses [129•] and another on the discovery of a recombinant CoV containing a reovirus P10 gene sequence [130•,131]. The true rate of CoV spillover into humans and livestock animals may be greatly underestimated as these occurrences do not always cause severe or lethal disease, demonstrated by serological surveillance. Spillover and zoonotic transmission of CoVs is not limited to bat CoVs, rather increasing evidence suggests the emergence of new CoV strains and the mutation of existing strains resulting in new disease syndromes in both animals and humans [132,133].

One of the challenging scientific questions is why many of the bat-borne zoonotic viruses are so lethal when they spill over into human and/or livestock animal populations. Up until now, our knowledge was very limited in addressing this question due to lack of research tools to conduct comparative immunology and pathogenesis studies in bats. Several recent studies, however, start to reveal that bats may have evolved a more balanced innate defence system. On one hand, bats have elevated level of certain defence genes or pathways from type I interferon [134] to apoptosis [135], at the same time bats exhibit more immune tolerance in different pathways, from inflammation [136], STING signalling [137] to NK cell activation [138]. However, it should be cautioned that these are very early and preliminary studies, many of them based on genomics and bioinformatics analysis only, more in-depth functional studies are required to get a better understanding of the asymptomatic infection of bats by viruses highly lethal in other mammals.

Conclusion

The importance of bats as a source of emerging viruses has been proven from numerous studies in the last two decades. While most of the investigation is triggered by zoonotic spillover of bat viruses, the impact of spillover into livestock animals should not be underestimated as shown by the SADS-CoV outbreak. From the great genetic diversity and wide geographical locations of the various bat viruses detected so far, it is almost certain that we will see more and more disease outbreaks caused by bat viruses. Among the 'known unknowns', bat coronaviruses may be a more likely cause of future spillover into both human and livestock populations due to their greater genetic diversity already known in bats around the world, their large positive strand RNA genome size with a high rate of recombination, and proven spillover events in both human and animals. We are still at an infancy stage in terms of understanding bat biology in the context of how some of the most lethal viruses can peacefully co-exist with bats, but most recent research findings suggest the key but not in other mammals.

Acknowledgements

We thank Xiao Fang Lim, Xinglou Yang and Anna Uehara for help with Figure 1, Figure 3 and Table 1, respectively. We are grateful to Andrew Hickey for critical review of the manuscript. The research in L-FW's group is funded by the National Research Foundation [NRF2012NRF-CRP001-056 and NRF2016NRF-NSFC002-013], Ministry of Health [CDPHRG/0006/2014] and Ministry of Defence [DIRP2015-9016102060] in Singapore. Research in DEA's group is funded by Duke-NUS Medical School and the Estate of Tan Sri Khoo Teck Puat [NUS-KBrFA/2018/0016].

References and recommended reading

Papers of particular interest, published within the period of review, have been highlighted as:

- • of special interest
- •• of outstanding interest

1. Taylor LH, Latham SM, Woolhouse ME: **Risk factors for human disease emergence**. *Philos Trans R Soc Lond B Biol Sci* 2001, **356**:983-989.

2. • Allen T, Murray KA, Zambrana-Torrelio C, Morse SS, Rondinini C, Di Marco M, Breit N, Olival KJ, Daszak P: **Global hotspots and correlates of emerging zoonotic diseases**. *Nat Commun* 2017, **8**:1124.

An updated version of the 2008 publication (Ref. [3]) with better modeling data and updated maps, which is an important resource for assessing risk of future emerging zoonotic diseases.

3. Jones KE, Patel NG, Levy MA, Storeygard A, Balk D, Gittleman JL, Daszak P: **Global trends in emerging infectious diseases**. *Nature* 2008, **451**:990-993.

4. Bean AG, Baker ML, Stewart CR, Cowled C, Deffrasnes C, Wang LF, Lowenthal JW: **Studying immunity to zoonotic diseases in the natural host - keeping it real**. *Nat Rev Immunol* 2013, **13**:851-861.

5. •• Calisher CH, Childs JE, Field HE, Holmes KV, Schountz T: **Bats: important reservoir hosts of emerging viruses**. *Clin Microbiol Rev* 2006, **19**:531-545.

Although it has been a decade since its publication, this paper remains to be one of the best reviews on this subject.

6. •• Olival KJ, Hosseini PR, Zambrana-Torrelio C, Ross N, Bogich TL, Daszak P: **Host and viral traits predict zoonotic spillover from mammals**. *Nature* 2017, **546**:646-650.

A milestone paper demonstrating the special status of bats as virus reservoir.

7. Wong S, Lau S, Woo P, Yuen KY: **Bats as a continuing source of emerging infections in humans**. *Rev Med Virol* 2007, **17**:67-91.

8. Wang LF, Walker PJ, Poon LL: **Mass extinctions, biodiversity and mitochondrial function: are bats' special' as reservoirs for emerging viruses?** *Curr Opin Virol* 2011, **1**:649-657.

9. Luis AD, Hayman DT, O'Shea TJ, Cryan PM, Gilbert AT, Pulliam JR, Mills JN, Timonin ME, Willis CK, Cunningham AA *et al.*: **A comparison of bats and rodents as reservoirs of zoonotic viruses: are bats special?** *Proc Biol Sci* 2013, **280** 20122753.

10. Teeling EC, Springer MS, Madsen O, Bates P, O'Brien SJ, Murphy WJ: **A molecular phylogeny for bats illuminates biogeography and the fossil record**. *Science* 2005, **307**:580-584.

11. Teeling EC, Vernes SC, Davalos LM, Ray DA, Gilbert MTP, Myers E: **Bat biology, genomes, and the Bat1K project: to generate chromosome-level genomes for all living bat species**. *Annu Rev Anim Biosci* 2018, **6**:23-46.

12. Smith I, Wang LF: **Bats and their virome: an important source of emerging viruses capable of infecting humans**. *Curr Opin Virol* 2013, **3**:84-91.

13. Peiris JS, Yuen KY, Osterhaus AD, Stohr K: **The severe acute respiratory syndrome**. *N Engl J Med* 2003, **349**:2431-2441.

14. Wang LF, Eaton BT: **Bats, civets and the emergence of SARS**. *Curr Top Microbiol Immunol* 2007, **315**:325-344.

15. Li W, Shi Z, Yu M, Ren W, Smith C, Epstein JH, Wang H, Crameri G, Hu Z, Zhang H *et al.*: **Bats are natural reservoirs of SARS-like coronaviruses**. *Science* 2005, **310**:676-679.

16. Lau SK, Woo PC, Li KS, Huang Y, Tsoi HW, Wong BH, Wong SS, Leung SY, Chan KH, Yuen KY: **Severe acute respiratory syndrome coronavirus-like virus in Chinese horseshoe bats**. *Proc Natl Acad Sci U S A* 2005, **102**:14040-14045.

17. Hu D, Zhu C, Ai L, He T, Wang Y, Ye F, Yang L, Ding C, Zhu X, Lv R *et al.*: **Genomic characterization and infectivity of a novel SARS-like coronavirus in Chinese bats**. *Emerg Microbes Infect* 2018, **7**:154.

18. • Ge XY, Li JL, Yang XL, Chmura AA, Zhu G, Epstein JH, Mazet JK, Hu B, Zhang W, Peng C *et al.*: **Isolation and characterization of a bat SARS-like coronavirus that uses the ACE2 receptor**. *Nature* 2013, **28**:535-538.
After more than ten years of continuous investigation, this paper finally demonstrated bats as the true reservoir of SARS related viruses.

19. Menachery VD, Yount BL, Sims AC, Debbink K, Agnihothram SS, Gralinski LE, Graham RL, Scobey T, Plante JA, Royal SR *et al.*: **SARS-like WIV1-CoV poised for human emergence**. *Proc Nat Acad Sci* 2016, **113**:3048-3053.

20. • Zaki AM, van Boheemen S, Bestebroer TM, Osterhaus AD, Fouchier RA: **Isolation of a novel coronavirus from a man with pneumonia in Saudi Arabia**. *N Engl J Med* 2012, **367**:1814-1820.
The paper opened a whole new area of MERS research, which is not going to stop in the foreseeable future.

21. Middle East respiratory syndrome coronavirus (MERS-CoV) on World Wide Web URL: http://www.who.int/emergencies/mers-cov/en/.

22. Reusken CB, Haagmans BL, Muller MA, Gutierrez C, Godeke GJ, Meyer B, Muth D, Raj VS, Smits-De Vries L, Corman VM *et al.*: **Middle East respiratory syndrome coronavirus neutralising serum antibodies in dromedary camels: a comparative serological study**. *Lancet Infect Dis* 2013, **13**:859-866.

23. Azhar EI, El-Kafrawy SA, Farraj SA, Hassan AM, Al-Saeed MS, Hashem AM, Madani TA: **Evidence for camel-to-human transmission of MERS coronavirus**. *N Engl J Med* 2014, **370**:2499-2505.

24. • Haagmans BL, Al Dhahiry SH, Reusken CB, Raj VS, Galiano M, Myers R, Godeke GJ, Jonges M, Farag E, Diab A *et al.*: **Middle East respiratory syndrome coronavirus in dromedary camels: an outbreak investigation**. *Lancet Infect Dis* 2014, **14**:140-145.
An important finding indicating that camels are the reservoir or amplifying host of MERS-CoV in Middle East.

25. Chu DK, Poon LL, Gomaa MM, Shehata MM, Perera RA, Abu Zeid D, El Rifay AS, Siu LY, Guan Y, Webby RJ *et al.*: **MERS coronaviruses in dromedary camels, Egypt**. *Emerg Infect Dis* 2014, **20**:1049-1053.

26. Muller MA, Meyer B, Corman VM, Al-Masri M, Turkestani A, Ritz D, Sieberg A, Aldabbagh S, Bosch BJ, Lattwein E *et al.*: **Presence of Middle East respiratory syndrome coronavirus antibodies in Saudi Arabia: a nationwide, cross-sectional, serological study**. *Lancet Infect Dis* 2015, **15**:559-564.

27. • Sabir JSM, Lam TT-Y, Ahmed MMM, Li L, Shen YEM, Abo-Aba S, Qureshi MI, Abu-Zeid M, Zhang Y, Khiyami MA *et al.*: **Co-circulation of three camel coronavirus species and recombination of MERS-CoVs in Saudi Arabia**. *Science* 2016, **351**:81-84.
It is important to find that MERS-CoV is not the only CoV circulating in Middle East camals.

28. Ithete NL, Stoffberg S, Corman VM, Cottontail VM, Richards LR, Schoeman MC, Drosten C, Drexler JF, Preiser W: **Close relative of human Middle East respiratory syndrome coronavirus in bat, South Africa**. *Emerg Infect Dis* 2013, **19**:1697-1699.

29. Luo C-M, Wang N, Yang X-L, Liu H-Z, Zhang W, Li B, Hu B, Peng C, Geng Q-B, Zhu G-J *et al.*: **Discovery of novel bat coronaviruses in South China that use the same receptor as Middle East respiratory syndrome coronavirus**. *J Virol* 2018, **92**.

30. • Anthony SJ, Gilardi K, Menachery VD, Goldstein T, Ssebide B, Mbabazi R, Navarrete-Macias I, Liang E, Wells H, Hicks A *et al.*: **Further evidence for bats as the evolutionary source of Middle East respiratory syndrome coronavirus**. *mBio* 2017, **8**.
An important finding although the evidence is not very strong.

31. Tao Y, Shi M, Chommanard C, Queen K, Zhang J, Markotter W, Kuzmin IV, Holmes EC, Tong S: **Surveillance of bat coronaviruses in Kenya identifies relatives of human coronaviruses NL63 and 229E and their recombination history**. *J Virol* 2017, **91**.

32. •• Zhou P, Fan H, Lan T, Yang XL, Shi WF, Zhang W, Zhu Y, Zhang YW, Xie QM, Mani S *et al.*: **Fatal swine acute diarrhoea syndrome caused by an HKU2-related coronavirus of bat origin**. *Nature* 2018, **556**:255-258.
This paper highlights that lethal outbreaks by bat CoVs are not limited to humans, they can happen in livestock animals as well.

33. • Murray K, Selleck P, Hooper P, Hyatt A, Gould A, Gleeson L, Westbury H, Hiley L, Selvey L, Rodwell B *et al.*: **A morbillivirus that caused fatal disease in horses and humans**. *Science* 1995, **268**:94-97.
First discovery of a bat-borne BSL4 virus which can affect both human and animals.

34. Field HE: **Hendra virus ecology and transmission**. *Curr Opin Virol* 2016, **16**:120-125.

35. Summary of Hendra virus incidents in horses on World Wide Web URL: https://www.business.qld.gov.au/industries/service-industries-professionals/service-industries/veterinary-surgeons/guidelines-hendra/incident-summary.

36. Field H, de Jong C, Melville D, Smith C, Smith I, Broos A, Kung YH, McLaughlin A, Zeddeman A: **Hendra virus infection dynamics in Australian fruit bats**. *PLoS One* 2011, **6** e28678.

37. Chua KB, Goh KJ, Wong KT, Kamarulzaman A, Tan PS, Ksiazek TG, Zaki SR, Paul G, Lam SK, Tan CT: **Fatal encephalitis due to Nipah virus among pig-farmers in Malaysia [see comments]**. *Lancet* 1999, **354**:1257-1259.

38. Chua KB, Bellini WJ, Rota PA, Harcourt BH, Tamin A, Lam SK, Ksiazek TG, Rollin PE, Zaki SR, Shieh W *et al.*: **Nipah virus: a recently emergent deadly paramyxovirus**. *Science* 2000, **288**:1432-1435.

39. Hsu VP, Hossain MJ, Parashar UD, Ali MM, Ksiazek TG, Kuzmin I, Niezgoda M, Rupprecht C, Bresee J, Breiman RF: **Nipah virus encephalitis reemergence, Bangladesh**. *Emerg Infect Dis* 2004, **10**:2082-2087.

40. Luby SP, Hossain MJ, Gurley ES, Ahmed BN, Banu S, Khan SU, Homaira N, Rota PA, Rollin PE, Comer JA *et al.*: **Recurrent zoonotic transmission of Nipah virus into humans, Bangladesh, 2001-2007**. *Emerg Infect Dis* 2009, **15**:1229-1235.

41. Nipah virus – India on World Wide Web URL: http://www.who.int/csr/don/07-august-2018-nipah-virus-india/en/.

42. Yob JM, Field H, Rashdi AM, Morrissy C, van der Heide B, Rota P, bin Adzhar A, White J, Daniels P, Jamaluddin A *et al.*: **Nipah virus infection in bats (order Chiroptera) in peninsular Malaysia**. *Emerg Infect Dis* 2001, **7**:439-441.

43. Chua KB, Lek Koh C, Hooi PS, Wee KF, Khong JH, Chua BH, Chan YP, Lim ME, Lam SK: **Isolation of Nipah virus from Malaysian Island flying-foxes**. *Microbes Infect* 2002, **4**:145-151.

44. Epstein JH, Prakash V, Smith CS, Daszak P, McLaughlin AB, Meehan G, Field HE, Cunningham AA: **Henipavirus infection in fruit bats (*Pteropus giganteus*), India**. *Emerg Infect Dis* 2008, **14**:1309-1311.

45. Yadav PD, Raut CG, Shete AM, Mishra AC, Towner JS, Nichol ST, Mourya DT: **Detection of Nipah virus RNA in fruit bat (*Pteropus giganteus*) from India**. *Am J Trop Med Hyg* 2012, **87**:576-578.

46. Anderson DE, Islam A, Crameri G, Todd S, Khan SU, Foord A, Rahman MZ, Mendenhall IH, Luby SP, Gurley ES *et al.*: **Isolation and full-genome characterization of Nipah viruses from bats, Bangladesh**. *Emerg Infect Dis* 2019, **25**.

47. Marsh GA, de Jong C, Barr JA, Tachedjian M, Smith C, Middleton D, Yu M, Todd S, Foord AJ, Haring V *et al.*: **Cedar virus: a novel Henipavirus isolated from Australian bats**. *PLoS Pathog* 2012, **8**:e1002836.

48. Olson JG, Rupprecht C, Rollin PE, An US, Niezgoda M, Clemins T, Walston J, Ksiazek TG: **Antibodies to Nipah-like virus in bats (*Pteropus lylei*), Cambodia**. *Emerg Infect Dis* 2002, **8**:987-988.

49. Sendow I, Ratnawati A, Taylor T, Adjid RM, Saepulloh M, Barr J, Wong F, Daniels P, Field H: **Nipah virus in the fruit bat *Pteropus vampyrus* in Sumatera, Indonesia**. *PLoS One* 2013, **8** e69544.

50. Pernet O, Schneider BS, Beaty SM, LeBreton M, Yun TE, Park A, Zachariah TT, Bowden TA, Hitchens P, Ramirez CM *et al.*: **Evidence for henipavirus spillover into human populations in Africa**. *Nat Commun* 2014, **5**:5342.

51. Peel AJ, Baker KS, Crameri G, Barr JA, Hayman DT, Wright E, Broder CC, Fernandez-Loras A, Fooks AR, Wang LF *et al.*: **Henipavirus neutralising antibodies in an isolated island population of African fruit bats**. *PLoS One* 2012, **7**:e30346.

52. Hayman DT, Suu-Ire R, Breed AC, McEachern JA, Wang L, Wood JL, Cunningham AA: **Evidence of henipavirus infection in West African fruit bats**. *PLoS One* 2008, **3**:e2739.

53. Iehle C, Razafitrimo G, Razainirina J, Andriaholinirina N, Goodman SM, Faure C, Georges-Courbot MC, Rousset D, Reynes JM: **Henipavirus and Tioman virus antibodies in pteropodid bats, Madagascar**. *Emerg Infect Dis* 2007, **13**: 159-161.

54. •• Drexler JF, Corman VM, Muller MA, Maganga GD, Vallo P, Binger T, Gloza-Rausch F, Cottontail VM, Rasche A, Yordanov S *et al.*: **Bats host major mammalian paramyxoviruses**. *Nat Commun* 2012, **3**:796.
A very large study demonstrating the great diversity of bat borne viruses in multiple viral families.

55. Chant K, Chan R, Smith M, Dwyer DE, Kirkland P: **Probable human infection with a newly described virus in the family *Paramyxoviridae*. The NSW expert group**. *Emerg Infect Dis* 1998, **4**:273-275.

56. Philbey AW, Kirkland PD, Ross AD, Field HE, Srivastava M, Davis RJ, Love RJ: **Infection with Menangle virus in flying foxes (*Pteropus spp.*) in Australia**. *Aust Vet J* 2008, **86**:449-454.

57. Barr JA, Smith C, Marsh GA, Field H, Wang LF: **Evidence of bat origin for Menangle virus, a zoonotic paramyxovirus first isolated from diseased pigs**. *J Gen Virol* 2012, **93**:2590-2594.

58. Chua KB, Wang LF, Lam SK, Crameri G, Yu M, Wise T, Boyle D, Hyatt AD, Eaton BT: **Tioman virus, a novel paramyxovirus isolated from fruit bats in Malaysia**. *Virology* 2001, **283**:215-229.

59. Yaiw KC, Bingham J, Crameri G, Mungall B, Hyatt A, Yu M, Eaton B, Shamala D, Wang LF, Thong Wong K: **Tioman virus, a paramyxovirus of bat origin, causes mild disease in pigs and has a predilection for lymphoid tissues**. *J Virol* 2008, **82**: 565-568.

60. • Katoh H, Kubota T, Ihara T, Maeda K, Takeda M, Kidokoro M: **Cross-neutralization between human and African Bat mumps viruses**. *Emerg Infect Dis* 2016, **22**:703-706.
For the first time, it is demonstrated that a mumps virus close relative exists in non-human mammals.

61. Krüger N, Hoffmann M, Drexler JF, Müller MA, Corman VM, Sauder C, Rubin S, He B, Örvell C, Drosten C *et al.*: **Functional properties and genetic relatedness of the fusion and hemagglutinin-neuraminidase proteins of a mumps virus-like bat virus**. *J Virol* 2015, **89**:4539-4548.

62. Beaty SM, Nachbagauer R, Hirsh A, Vigant F, Duehr J, Azarm KD, Stelfox AJ, Bowden TA, Duprex WP, Krammer F *et al.*: **Cross-reactive and cross-neutralizing activity of human mumps antibodies against a novel mumps virus from bats**. *J Infect Dis* 2017, **215**:209-213.

63. Kruger N, Sauder C, Huttl S, Papies J, Voigt K, Herrler G, Hardes K, Steinmetzer T, Orvell C, Drexler JF *et al.*: **Entry, replication, immune evasion, and neurotoxicity of synthetically engineered bat-borne mumps virus**. *Cell Rep* 2018, **25**:312-320 e317.

64. Stephan H, Gay G, Ramirez T: **Encephalomyelitis, reproductive failure and corneal opacity (blue eye) in pigs, associated with a paramyxovirus infection**. *Vet Rec* 1988, **122**:6-10.

65. Salas-Rojas M, Sanchez-Hernandez C, Romero-Almaraz Md Mde L, Schnell GD, Schmid RK, Aguilar-Setien A: **Prevalence of rabies and LPM paramyxovirus antibody in non-hematophagous bats captured in the Central Pacific coast of Mexico**. *Trans R Soc Trop Med Hyg* 2004, **98**:577-584.

66. Wang LF, Hansson E, Yu M, Chua KB, Mathe N, Crameri G, Rima BK, Moreno-Lopez J, Eaton BT: **Full-length genome sequence and genetic relationship of two paramyxoviruses isolated from bat and pigs in the Americas**. *Arch Virol* 2007, **152**:1259-1271.

67. Zeller HG, Karabatsos N, Calisher CH, Digoutte JP, Cropp CB, Murphy FA, Shope RE: **Electron microscopic and antigenic studies of uncharacterized viruses. II. Evidence suggesting the placement of viruses in the family *Bunyaviridae***. *Arch Virol* 1989, **108**:211-227.

68. Lau SK, Woo PC, Wong BH, Wong AY, Tsoi HW, Wang M, Lee P, Xu H, Poon RW, Guo R *et al.*: **Identification and complete genome analysis of three novel paramyxoviruses, tuhoko virus 1, 2 and 3, in fruit bats from China**. *Virology* 2010, **404**:106-2116.

69. • Albarino CG, Foltzer M, Towner JS, Rowe LA, Campbell S, Jaramillo CM, Bird BH, Reeder DM, Vodzak ME, Rota P *et al.*: **Novel paramyxovirus associated with severe acute febrile disease, South Sudan and Uganda, 2012**. *Emerg Infect Dis* 2014, **20**:211-216.
Although it was limited to a single patient, it demonstrated that the spill over events of bat viruses may occur more frequently than we expected.

70. Amman BR, Albarino CG, Bird BH, Nyakarahuka L, Sealy TK, Balinandi S, Schuh AJ, Campbell SM, Stroher U, Jones ME *et al.*: **A recently discovered pathogenic paramyxovirus, sosuga virus, is present in rousettus aegyptiacus fruit bats at multiple locations in Uganda**. *J Wildl Dis* 2015, **51**:774-779.

71. Piot P, Spencer J: **From 1976 to 2018: reflections on early investigations into the Ebola virus**. *Trans R Soc Trop Med Hyg* 2018, **112**:527-528.

72. Nakkazi E: **DR Congo ebola virus outbreak: responding in a conflict zone**. *Lancet* 2018, **392**:623.

73. Goldstein T, Anthony SJ, Gbakima A, Bird BH, Bangura J, Tremeau-Bravard A, Belaganahalli MN, Wells HL, Dhanota JK, Liang E *et al.*: **The discovery of Bombali virus adds further support for bats as hosts of ebolaviruses**. *Nat Microbiol* 2018, **3**:1084-1089.

74. Johnson ED, Johnson BK, Silverstein D, Tukei P, Geisbert TW, Sanchez AN, Jahrling PB: **Characterization of a new Marburg virus isolated from a 1987 fatal case in Kenya**. *Arch Virol Suppl* 1996, **11**:101-114.

75. Towner JS, Khristova ML, Sealy TK, Vincent MJ, Erickson BR, Bawiec DA, Hartman AL, Comer JA, Zaki SR, Stroher U *et al.*: **Marburgvirus genomics and association with a large hemorrhagic fever outbreak in Angola**. *J Virol* 2006, **80**:6497-6516.

76. Negredo A: **Discovery of an ebolavirus-like filovirus in Europe**. *PLoS Pathog* 2011, **7**:e1002304.

77. Kemenesi G, Kurucz K, Dallos B, Zana B, Foldes F, Boldogh S, Gorfol T, Carroll MW, Jakab F: **Re-emergence of Lloviu virus in Miniopterus schreibersii bats, Hungary, 2016**. *Emerg Microbes Infect* 2018, **7**:66.

78. • Yang X-L, Tan CW, Anderson DE, Jian R-D, Li B, Zhang W, Zhu Y, Lim XF, Zhou P, Liu X-L *et al.*: **Characterization of a filovirus (Měnglà virus) from Rousettus bats in China**. *Nat Microbiol* 2019 http://dx.doi.org/10.1038/s41564-018-0328-y.
This is the first time that a novel filovirus representing a new genus is discovered in Asia.

79. • Towner JS, Amman BR, Sealy TK, Carroll SA, Comer JA, Kemp A, Swanepoel R, Paddock CD, Balinandi S, Khristova ML *et al.*: **Isolation of genetically diverse Marburg viruses from Egyptian fruit bats**. *PLoS Pathog* 2009, **5**:e1000536.
This is important in the context of debate on whether bats are true reservoir of filoviruses.

80. Schuh AJ, Amman BR, Towner JS: **Filoviruses and bats**. *Microbiol Aust* 2017, **38**:12-16.

81. Leendertz SAJ: **Testing new hypotheses regarding ebolavirus reservoirs**. *Viruses* 2016, **8**:30-34.

82. Schiff LA, Nibert ML, Tyler KL: **Orthoreoviruses and their replication**. In *Fields Virology*. Edited by Knipe DM, Griffin DE, Lamb RA, Straus SE, Howley PM, Martin MA, Roizman B. Lippincott Williams & Wilkins; 2007:1853-1915.

83. •• Chua KB, Crameri G, Hyatt A, Yu M, Tompang MR, Rosli J, McEachern J, Crameri S, Kumarasamy V, Eaton BT *et al.*: **A previously unknown reovirus of bat origin is associated with an acute respiratory disease in humans**. *Proc Natl Acad Sci U S A* 2007, **104**:11424-11429.
First demonstration that bat reovirus can cause severe diseases in humans, which opened up a new field of research with many more discoveries of similar cases in different countries.

84. Gard GP, Marshall ID: **Nelson Bay virus. A novel reovirus**. *Arch Gesamte Virusforsch* 1973, **43**:34-42.

85. Pritchard LI, Chua KB, Cummins D, Hyatt A, Crameri G, Eaton BT, Wang LF: **Pulau virus; a new member of the Nelson Bay orthoreovirus species isolated from fruit bats in Malaysia**. *Arch Virol* 2006, **151**:229-239.

86. Chua KB, Voon K, Crameri G, Tan HS, Rosli J, McEachern JA, Suluraju S, Yu M, Wang LF: **Identification and characterization of a new orthoreovirus from patients with acute respiratory infections**. *PLoS One* 2008, **3**:e3803.

87. Cheng P, Lau CS, Lai A, Ho E, Leung P, Chan F, Wong A, Lim W: **A novel reovirus isolated from a patient with acute respiratory disease**. *J Clin Virol* 2009, **45**:79-80.

88. Du L, Lu Z, Fan Y, Meng K, Jiang Y, Zhu Y, Wang S, Gu W, Zou X, Tu C: **Xi river virus, a new bat reovirus isolated in southern China**. *Arch Virol* 2010, **155**:1295-1299.

89. Chua KB, Voon K, Yu M, Keniscope C, Abdul Rasid K, Wang LF: **Investigation of a potential zoonotic transmission of orthoreovirus associated with acute influenza-like illness in an adult patient**. *PLoS One* 2011, **6** e25434.

90. Wong AH, Cheng PK, Lai MY, Leung PC, Wong KK, Lee WY, Lim WW: **Virulence potential of fusogenic orthoreoviruses**. *Emerg Infect Dis* 2012, **18**:944-948.

91. Singh H, Yoshikawa T, Kobayashi T, Fukushi S, Tani H, Taniguchi S, Fukuma A, Yang M, Sugamata M, Shimojima M *et al.*: **Rapid whole genome sequencing of Miyazaki-Bali/2007 Pteropine orthoreovirus by modified rolling circular amplification with adaptor ligation - next generation sequencing**. *Sci Rep* 2015, **5**:16517.

92. Hu T, Qiu W, He B, Zhang Y, Yu J, Liang X, Zhang W, Chen G, Zhang Y, Wang Y *et al.*: **Characterization of a novel orthoreovirus isolated from fruit bat, China**. *BMC Microbiol* 2014, **14**:293.

93. Lorusso A, Teodori L, Leone A, Marcacci M, Mangone I, Orsini M, Capobianco-Dondona A, Camma C, Monaco F, Savini G: **A new member of the Pteropine Orthoreovirus species isolated from fruit bats imported to Italy**. *Infect Genet Evol* 2015, **30**:55-58.

94. Taniguchi S, Maeda K, Horimoto T, Masangkay JS, Puentespina R Jr, Alvarez J, Eres E, Cosico E, Nagata N, Egawa K *et al.*: **First isolation and characterization of pteropine orthoreoviruses in fruit bats in the Philippines**. *Arch Virol* 2017, **162**:1529-1539.

95. Takemae H, Basri C, Mayasari N, Tarigan R, Shimoda H, Omatsu T, Supratikno, Pramono D, Cahyadi DD, Kobayashi R *et al.*: **Isolation of Pteropine orthoreovirus from *Pteropus vampyrus* in Garut, Indonesia**. *Virus Genes* 2018, **54**:823-827.

96. Singh H, Shimojima M, Ngoc TC, Quoc Huy NV, Chuong TX, Le Van A, Saijo M, Yang M, Sugamata M: **Serological evidence of human infection with Pteropine orthoreovirus in Central Vietnam**. *J Med Virol* 2015, **87**:2145-2148.

97. Voon K, Tan YF, Leong PP, Teng CL, Gunnasekaran R, Ujang K, Chua KB, Wang LF: **Pteropine orthoreovirus infection among out-patients with acute upper respiratory tract infection in Malaysia**. *J Med Virol* 2015, **87**:2149-2153.

98. Yinda CK, Ghogomu SM, Conceição-Neto N, Beller L, Deboutte W, Vanhulle E, Maes P, Van Ranst M, Matthijnssens J: **Cameroonian fruit bats harbor divergent viruses, including rotavirus H, bastroviruses, and picobirnaviruses using an alternative genetic code**. *Virus Evol* 2018, **4** vey008-vey008.

99. Geldenhuys M, Mortlock M, Weyer J, Bezuidt O, Seamark ECJ, Kearney T, Gleasner C, Erkkila TH, Cui H, Markotter W: **A metagenomic viral discovery approach identifies potential zoonotic and novel mammalian viruses in Neoromicia bats within South Africa**. *PLoS One* 2018, **13**:e0194527.

100. Tse H, Chan WM, Li KS, Lau SK, Woo PC, Yuen KY: **Discovery and genomic characterization of a novel bat sapovirus with unusual genomic features and phylogenetic position**. *PLoS One* 2012, **7**:e34987.

101. Wang J, Moore NE, Murray ZL, McInnes K, White DJ, Tompkins DM, Hall RJ: **Discovery of novel virus sequences in an isolated and threatened bat species, the New Zealand lesser short-tailed bat (*Mystacina tuberculata*)**. *J Gen Virol* 2015, **96**:2442-2452.

102. Kemenesi G, Dallos B, Görföl T, Boldogh S, Estók P, Kurucz K, Kutas A, Földes F, Oldal M, Németh V *et al.*: **Molecular survey of RNA viruses in Hungarian bats: discovering novel astroviruses, coronaviruses, and caliciviruses**. *Vector-Borne Zoonotic Dis* 2014, **14**:846-855.

103. Waruhiu C, Ommeh S, Obanda V, Agwanda B, Gakuya F, Ge X-Y, Yang X-L, Wu L-J, Zohaib A, Hu B *et al.*: **Molecular detection of viruses in Kenyan bats and discovery of novel astroviruses, caliciviruses and rotaviruses**. *Virol Sin* 2017, **32**:101-114.

104. Yinda CK, Zeller M, Conceição-Neto N, Maes P, Deboutte W, Beller L, Heylen E, Ghogomu SM, Van Ranst M, Matthijnssens J: **Novel highly divergent reassortant bat rotaviruses in Cameroon, without evidence of zoonosis**. *Sci Rep* 2016, **6**:34209.

105. He B, Huang X, Zhang F, Tan W, Matthijnssens J, Qin S, Xu L, Zhao Z, Le Yang, Wang Q *et al.*: **Group A rotaviruses in Chinese bats: genetic composition, serology and evidence for bat–to–human transmission and reassortment**. *J Virol* 2017, **91** pii: e02493-16.

106. He B, Yang F, Yang W, Zhang Y, Feng Y, Zhou J, Xie J, Feng Y, Bao X, Guo H *et al.*: **Characterization of a novel G3P[3] rotavirus isolated from a lesser horseshoe bat: a distant relative of feline/canine rotaviruses**. *J Virol* 2013, **87**:12357-12366.

107. Le Yang, Wang Q, Xu L, Tu C, Huang X, He B: **Detection and characterization of a novel norovirus in bats, China**. *Virol Sin* 2018, **33**:100-103.

108. Wu Z, Yang L, Ren X, He G, Zhang J, Yang J, Qian Z, Dong J, Sun L, Zhu Y *et al.*: **Deciphering the bat virome catalog to better understand the ecological diversity of bat viruses and the bat origin of emerging infectious diseases**. *ISME J* 2016, **10**: 609-620.

109. Kocher JF, Lindesmith LC, Debbink K, Beall A, Mallory ML, Yount BL, Graham RL, Huynh J, Gates JE, Donaldson EF *et al.*: **Bat caliciviruses and human noroviruses are antigenically similar and have overlapping histo-blood group antigen binding profiles**. *mBio* 2018, **9**.

110. Tong S, Li Y, Rivailler P, Conrardy C, Castillo DAA, Chen L-M, Recuenco S, Ellison JA, Davis CT, York IA *et al.*: **A distinct lineage of influenza A virus from bats**. *Proc Nat Acad Sci U S A* 2012, **109**:4269.

111. Tong S, Zhu X, Li Y, Shi M, Zhang J, Bourgeois M, Yang H, Chen X, Recuenco S, Gomez J *et al.*: **New world bats harbor diverse influenza A viruses**. *PLOS Pathog* 2013, **9**:e1003657.

112. Moreira ÉA, Locher S, Kolesnikova L, Bolte H, Aydillo T, García-Sastre A, Schwemmle M, Zimmer G: **Synthetically derived bat influenza A-like viruses reveal a cell type- but not species-specific tropism**. *Proc Nat Acad Sci U S A* 2016, **113**:12797.

113. Zhou B, Ma J, Liu Q, Bawa B, Wang W, Shabman RS, Duff M, Lee J, Lang Y, Cao N *et al.*: **Characterization of uncultivable bat influenza virus using a replicative synthetic virus**. *PLoS Pathog* 2014, **10**:e1004420.

114. Ciminski K, Thamamongood T, Zimmer G, Schwemmle M: **Novel insights into bat influenza A viruses**. *J Gen Virol* 2017, **98**: 2393-2400.

115. Guo W-P, Lin X-D, Wang W, Tian J-H, Cong M-L, Zhang H-L, Wang M-R, Zhou R-H, Wang J-B, Li M-H *et al.*: **Phylogeny and origins of hantaviruses harbored by bats, insectivores, and rodents**. *PLoS Pathog* 2013, **9**:e1003159.

116. Weiss S, Witkowski PT, Auste B, Nowak K, Weber N, Fahr J, Mombouli J-V, Wolfe ND, Drexler JF, Drosten C *et al.*: **Hantavirus in bat, Sierra Leone**. *Emerg Infect Dis* 2012, **18**:159-161.

117. Kim GR, Lee YT, Park CH: **A new natural reservoir of hantavirus: isolation of hantaviruses from lung tissues of bats**. *Arch Virol* 1994, **134**:85-95.

118. Sabino-Santos G Jr, Maia FGM, Vieira TM, de Lara Muylaert R, Lima SM, Gonçalves CB, Barroso PD, Melo MN, Jonsson CB, Goodin D *et al.*: **Evidence of hantavirus infection among bats in Brazil**. *Am J Trop Med Hyg* 2015, **93**:404-406.

119. Sabino-Santos G Jr, Maia FGM, Martins RB, Gagliardi TB, Souza WMD, Muylaert RL, Luna LKDS, Melo DM, Cardoso RDS, Barbosa NDS *et al.*: **Natural infection of Neotropical bats with hantavirus in Brazil**. *Sci Rep* 2018, **8**:9018.

120. de Araujo J, Thomazelli LM, Henriques DA, Lautenschalager D, Ometto T, Dutra LM, Aires CC, Favorito S, Durigon EL: **Detection of hantavirus in bats from remaining rain forest in Sao Paulo, Brazil**. *BMC Res Notes* 2012, **5**:690.

121. Xu B, Liu L, Huang X, Ma H, Zhang Y, Du Y, Wang P, Tang X, Wang H, Kang K *et al.*: **Metagenomic analysis of fever, thrombocytopenia and leukopenia syndrome (FTLS) in Henan Province, China: discovery of a new bunyavirus**. *PLoS Pathog* 2011, **7**:e1002369.

122. McMullan LK, Folk SM, Kelly AJ, MacNeil A, Goldsmith CS, Metcalfe MG, Batten BC, Albarino CG, Zaki SR, Rollin PE *et al.*: **A new phlebovirus associated with severe febrile illness in Missouri**. *N Engl J Med* 2012, **367**:834-841.

123. Mourya DT, Yadav PD, Basu A, Shete A, Patil DY, Zawar D, Majumdar TD, Kokate P, Sarkale P, Raut CG *et al.*: **Malsoor virus, a novel bat phlebovirus, is closely related to severe fever with thrombocytopenia syndrome virus and heartland virus**. *J Virol* 2014, **88**:3605-3609.

124. Pawan JL: **Rabies in the vampire bat of Trinidad, with special reference to the clinical course and the latency of infection**. *Caribb Med J* 1959, **21**:137-156.

125. Waterman JA: **The history of the outbreak of paralytic rabies in Trinidad transmitted by bats to human beings and the lower animals from 1925**. *Caribb Med J* 1959, **21**:1-6.

126. Francis JR, McCall BJ, Hutchinson P, Powell J, Vaska VL, Nourse C: **Australian bat lyssavirus: implications for public health**. *Med J Aust* 2014, **201**:647-649.

127. Smith EC, Blanc H, Vignuzzi M, Denison MR: **Coronaviruses lacking exoribonuclease activity are susceptible to lethal mutagenesis: evidence for proofreading and potential therapeutics**. *PLoS Pathog* 2013, **10**.

128. Denison MR, Graham RL, Donaldson EF, Eckerle LD, Baric RS: **Coronaviruses: an RNA proofreading machine regulates replication fidelity and diversity**. *RNA Biol* 2011, **8**:270-279.

129. • Hu B, Zeng LP, Yang XL, Ge XY, Zhang W, Li B, Xie JZ, Shen XR, Zhang YZ, Wang N *et al.*: **Discovery of a rich gene pool of bat SARS-related coronaviruses provides new insights into the origin of SARS coronavirus**. *PLoS Pathog* 2017, **13**:e1006698.
A very detailed study to show that all building blocks of SARS-CoV are present among a diverse group of CoVs in the same cave.

130. • Huang C, Liu WJ, Xu W, Jin T, Zhao Y, Song J, Shi Y, Ji W, Jia H, Zhou Y *et al.*: **A bat-derived putative cross-family recombinant coronavirus with a reovirus gene**. *PLoS Pathog* 2016, **12**: e1005883.
An important finding demonstrating that CoVs are highly active in recombination, even with viruses outside the coronavirus family.

131. Obameso JO, Li H, Jia H, Han M, Zhu S, Huang C, Zhao Y, Zhao M, Bai Y, Yuan F *et al.*: **The persistent prevalence and evolution of cross-family recombinant coronavirus GCCDC1 among a bat population: a two-year follow-up**. *Sci China Life Sci* 2017, **60**:1357-1363.

132. Lau SKP, Chan JFW: **Coronaviruses: emerging and re-emerging pathogens in humans and animals**. *Virol J* 2015, **12**:209.

133. Saif LJ: **Animal coronaviruses: what can they teach us about the severe acute respiratory syndrome?** *Rev Sci Tech* 2004, **23**:643-660.

134. Zhou P, Tachedjian M, Wynne JW, Boyd V, Cui J, Smith I, Cowled C, Ng JH, Mok L, Michalski WP *et al.*: **Contraction of the type I IFN locus and unusual constitutive expression of IFN-alpha in bats**. *Proc Natl Acad Sci U S A* 2016, **113**:2696-2701.

135. Wynne JW, Shiell BJ, Marsh GA, Boyd V, Harper JA, Heesom K, Monaghan P, Zhou P, Payne J, Klein R *et al.*: **Proteomics informed by transcriptomics reveals Hendra virus sensitizes bat cells to TRAIL-mediated apoptosis**. *Genome Biol* 2014, **15**:532.

136. Ahn M, Cui J, Irving AT, Wang LF: **Unique loss of the PYHIN gene family in bats amongst mammals: implications for inflammasome sensing**. *Sci Rep* 2016, **6**:21722.

137. Xie J, Li Y, Shen X, Goh G, Zhu Y, Cui J, Wang LF, Shi ZL, Zhou P: **Dampened STING-dependent interferon activation in bats**. *Cell Host Microbe* 2018, **23**:297-301 e294.

138. Pavlovich SS, Lovett SP, Koroleva G, Guito JC, Arnold CE, Nagle ER, Kulcsar K, Lee A, Thibaud-Nissen F, Hume AJ *et al.*: **The Egyptian rousette genome reveals unexpected features of bat antiviral immunity**. *Cell* 2018, **173**:1098-1110 e1018.